SR-4545 - 450MM SINK

Innova Single Bowl Sink

- 1.2mm SS304 Stainless Steel
- Sound Deadening Pads
- Waste Included
- No Overflow

Product Code:
SR-4545

Satin Finish

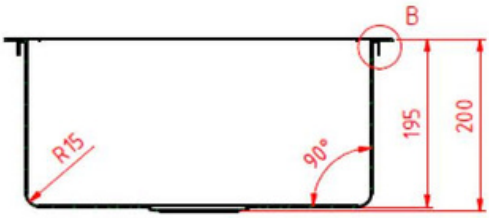

A-A

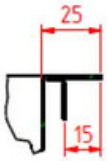
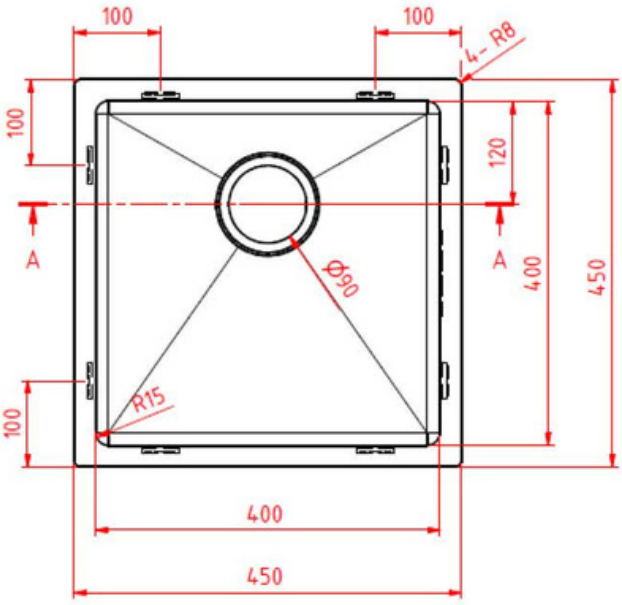
B