# INNOVA
# SC6600

**Innova 1 & ½ Bowl Kitchen Sink**

Features
- 1.2mm SS304 Stainless Steel
- Top or Undermount Installation
- Sound Deadening Pads
- Waste Included
- No Overflow
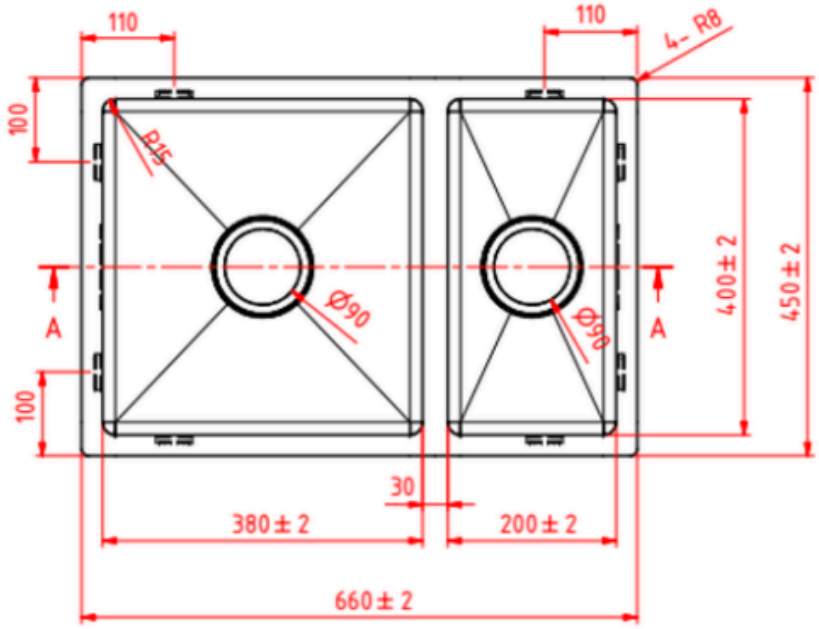
A-A